ProConnect® Series

ProConnect® 4-Station CPU Switch

Use this Guide to install: **SVIEW04 ver. 2**

User Guide

LINKSYS®

COPYRIGHT & TRADEMARKS
Copyright © 2001 Linksys, All Rights Reserved. ProConnect is a registered trademark of Linksys. Microsoft, Windows, and the Windows logo are registered trademarks of Microsoft Corporation. All other trademarks and brand names are the property of their respective proprietors.

LIMITED WARRANTY
Linksys guarantees that every ProConnect® Series ProConnect 4-Station CPU Switch will be free from physical defects in material and workmanship for one year from the date of purchase, when used within the limits set forth in the Specification section of this User Guide. If these products prove defective during this warranty period, call Linksys Customer Support in order to obtain a Return Authorization Number. BE SURE TO HAVE YOUR PROOF OF PURCHASE AND A BARCODE FROM THE PRODUCT'S PACKAGING ON HAND WHEN CALLING. RETURN REQUESTS CANNOT BE PROCESSED WITHOUT PROOF OF PURCHASE. When returning a product, mark the Return Authorization Number clearly on the outside of the package and include your original proof of purchase. All customers located outside of the United States of America and Canada shall be held responsible for shipping and handling charges.

IN NO EVENT SHALL LINKSYS' LIABILITY EXCEED THE PRICE PAID FOR THE PRODUCT FROM DIRECT, INDIRECT, SPECIAL, INCIDENTAL, OR CONSEQUENTIAL DAMAGES RESULTING FROM THE USE OF THE PRODUCT, ITS ACCOMPANYING SOFTWARE, OR ITS DOCUMENTATION. LINKSYS DOES NOT OFFER REFUNDS FOR ANY PRODUCT. Linksys makes no warranty or representation, expressed, implied, or statutory, with respect to its products or the contents or use of this documentation and all accompanying software, and specifically disclaims its quality, performance, merchantability, or fitness for any particular purpose. Linksys reserves the right to revise or update its products, software, or documentation without obligation to notify any individual or entity. Please direct all inquiries to:

Linksys P.O. Box 18558, Irvine, CA 92623.

FCC STATEMENT
This product has been tested and complies with the specifications for a Class B digital device, pursuant to Part 15 of the FCC Rules. These limits are designed to provide reasonable protection against harmful interference in a residential installation. This equipment generates, uses, and can radiate radio frequency energy and, if not installed and used according to the instructions, may cause harmful interference to radio communications. However, there is no guarantee that interference will not occur in a particular installation. If this equipment does cause harmful interference to radio or television reception, which is found by turning the equipment off and on, the user is encouraged to try to correct the interference by one or more of the following measures:

- Reorient or relocate the receiving antenna
- Increase the separation between the equipment or device
- Connect the equipment to an outlet other than the receiver's
- Consult a dealer or an experienced radio/TV technician for assistance

UG-SVIEW04 v2-010531NC KL

Table of Contents

Introduction 1
- The ProConnect® Series ProConnect® 4-Station CPU Switch 1
- Features 1
- Package Contents 2
- System Requirements 2

Getting to Know the ProConnect® 4-Station CPU Switch 3
- The 4-Station CPU Switch's Front Panel 3
- The 4-Station CPU Switch's Rear Panel 4

Connecting PCs to the ProConnect® 4-Station CPU Switch 5
- Single Stage Installation 5
- Two Stage Installation 6
- Three Stage Installation 7

Using the ProConnect® 4-Station CPU Switch 9
- Hot Plugging 9
- Powering Off and Restarting 10
- Port Selection 10
- HotKey Port Selection 11

Troubleshooting 14

Specifications 15
- Environmental 16

Warranty Information 17

Contact Information 18

Introduction

The ProConnect® Series ProConnect® 4-Station CPU Switch

The ProConnect® 4-Station CPU Switch from Linksys lets you take instant command over multiple desktop or notebook PCs - all from a single keyboard, mouse, and monitor! Switch between PCs with the press of a key, or use the cycling feature to switch automatically at pre-selected time intervals. Got a notebook PC? Plug it into the switch and control it from your desktop PC's full-sized keyboard, monitor, and mouse. It's like having your own docking station!

Built to last, the ProConnect® 4-Station CPU Switch virtually eliminates cable swapping while saving you hundreds of dollars in storage space and hardware costs. It's the perfect choice for any file server fleet, Internet, or test site where you need to manage PCs quickly and easily.

Features

- Control Multiple PCs from One Keyboard, Mouse, and Monitor
- Switch Instantly Between PCs from Your Keyboard or the CPU Switch's Select Button
- Save Hundreds of Dollars in Equipment, Space, and Power Costs
- Serves as a Quick Docking Station
- Reduce Required Floor Space by up to 50%
- Expand by Chaining Multiple Switches Together
- Runs with Virtually All Software
- Tested with Most Popular Monitor Brands
- No Software Required
- Smart Circuitry Prevents Power Surges
- Sturdy Metal Chassis and Quality Connectors
- Free Technical Support
- One Year Limited Warranty

Package Contents

- One ProConnect® 4-Station CPU Switch
- One AC Power Adapter
- One User Guide and Registration Card

NOTE: For PCs that use standard PS2 connections, you can purchase a Linksys Cabling Kit, model #SVPS06, from your Linksys retailer. Computers that use an AT-style keyboard socket or a 9-pin serial port will require an additional adapter.

System Requirements

4-Station Console Ports:

- One VGA, SVGA, or Multisync monitor capable of the highest resolution that you will be using on any computer installed
- One PS/2 style mouse
- One PS/2 style keyboard

PC's:

- One VGA, SVGA or Multisync video card
- One 6-pin mini-DIN (PS/2 style) or DB-9 (standard serial) mouse port
- One 6-pin mini-DIN (PS/2 style) keyboard port with a +5V DC on pin 4 and Ground on pin 3 or a 5-pin DIN (AT style) keyboard port with +5V DC on pin 5 and Ground on pin 4.

Getting to Know the ProConnect® 4-Station CPU Switch

The 4-Station CPU Switch's Front Panel

On Line Port LED	Orange. Indicates that the computer attached to the corresponding port is up and running.
Selected Port LED	Green. Indicates the currently selected port. This LED will flash when the corresponding port is accessed under Auto Scan mode.
Auto Scan Button	Pressing this button starts Auto Scan Mode. Holding down buttons #3 and #4 simultaneously for several seconds also starts the Auto Scan mode.
Port Selection Button	Pressing this button accesses the computer connected to the corresponding port.
Reset	Pressing buttons #1 and #2 simultaneously for about ten seconds performs a Keyboard and Mouse reset.

The 4-Station CPU Switch's Rear Panel

Power The Power Port is where you will connect the included Power Adapter.

Console ports When using this CPU Switch alone, a monitor, keyboard, and mouse are plugged into these ports. If this CPU Switch is being used as a secondary or tertiary switch when using the Two Stage or Three Stage installations, connect these ports to a CPU Port of the CPU Switch being used as the primary unit.

CPU ports Connect the cables that link the computers here. Linksys cable kits can be purchased at your nearest Linksys dealer.

Connecting PCs to the ProConnect® 4-Station CPU Switch

Before you connect any PCs to the 4-Station CPU Switch, make sure that the power on all of the PCs you will be connecting is off. You must also unplug the power cords or any computers that have the *Keyboard Power On* function. To prevent any damage to the 4-Station CPU Switch, make sure that all devices you are connecting are properly grounded.

Make sure you have enough Cabling Kits (model #SVPS06, from your nearest Linksys dealer) available to make the desired number of connections.

Up to three tiers of ProConnect® CPU Switches can be connected together to control up to 64 computers. These can be done in a Single Station, Two Stage, or Three Stage Installation.

NOTE: Connecting different models of CPU Switches can cause problems with HotKey port switching. To prevent this, only use ProConnect® 4-Station CPU Switches when connecting them together.

Single Station Installation

In a Single Station Installation, up to four computers are connected directly to the CPU Switch, as shown in the diagram below. No additional ProConnect® CPU Switches are connected to the first CPU Switch.

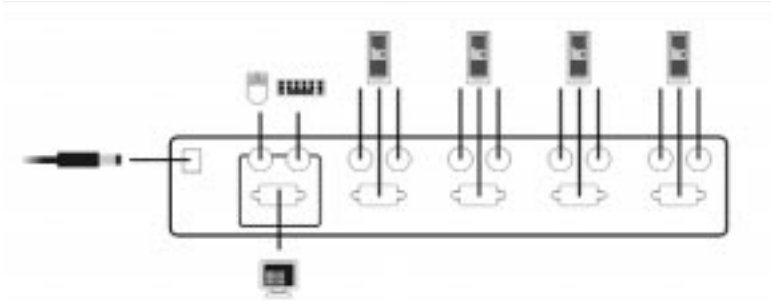

1. Plug your keyboard, mouse, and monitor into the 4-Station CPU Switch's Console ports.

2. Connect the monitor, keyboard, and mouse ports of your PC(s) to one of the 4-Station CPU Switch's CPU ports with a Cabling Kit.

3. Plug the Power Adapter into the 4-Station CPU Switch's power port, then plug the Power Adapter into a power source.

4. Power on the connected PC(s).

Two Stage Installation

To control up to 16 PCs through the 4-Station CPU Switch, you will need to connect four additional 4-Station CPU Switches to your first 4-Station CPU Switch. This is the Two Stage Installation process. It will create 16 open ports for controlling PCs.

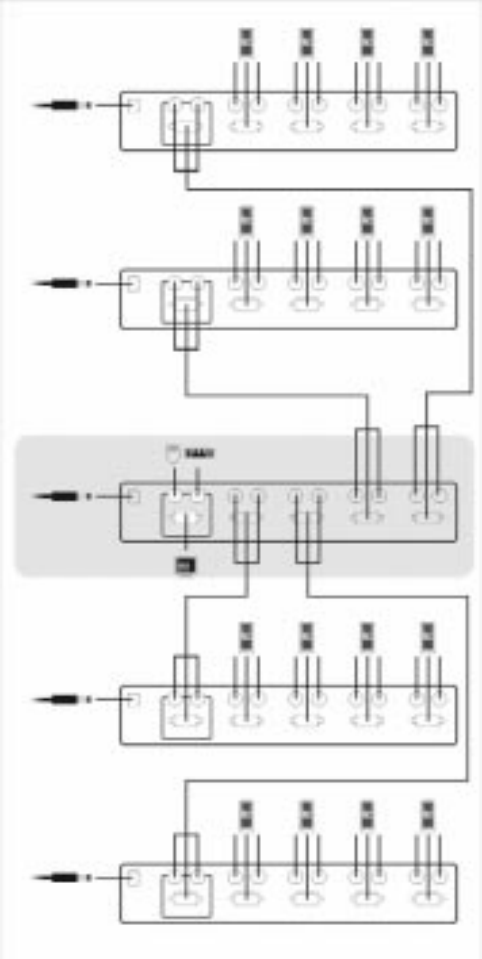

1. Using one 4-Station CPU Switch as a Primary unit and the other 4-Station CPU Switches as Secondary units, use a Cabling Kit to connect the Console ports of the Secondary Units to the CPU ports of the Primary unit. In this way, the 16 CPU ports of the Secondary units are available through the Primary unit.

2. Connect the monitor, keyboard, and mouse ports of your PC(s), up to 16, to a CPU port in one the Secondary units with a Cabling Kit.

3. Plug the Power Adapters into the 4-Station CPU Switches' power ports, then plug each Power Adapter into a power source.

4. Power on the connected PC(s).

Three Stage Installation

To control the maximum number of PCs under the Three Stage Installation, you will need to connect four additional 4-Station CPU Switches to your first 4-Station CPU Switch, and each of those four additional 4-Station CPU Switches will need four 4-Station CPU Switches connected to them, as shown. This is the Three Stage Installation process. It will create 64 open ports for controlling PCs.

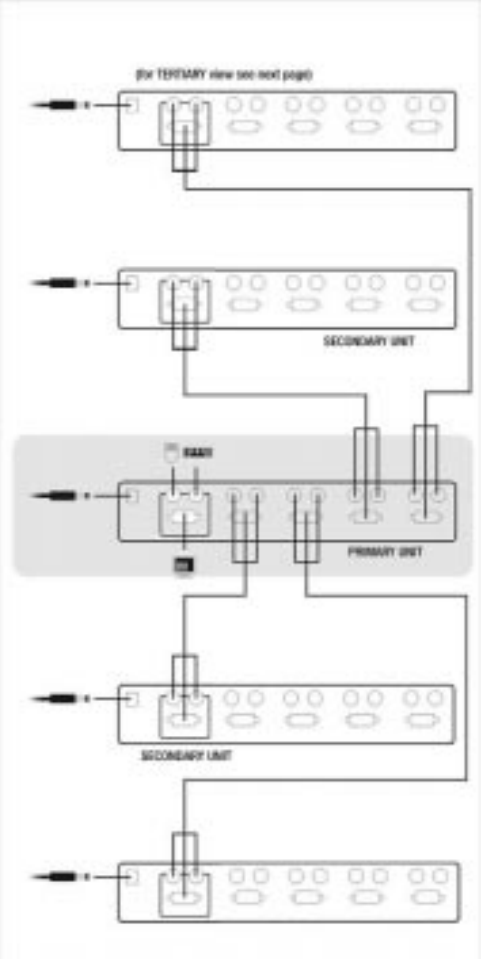

1. Using one 4-Station CPU Switch as a Primary unit and the other four 4-Station CPU Switches as Secondary units, use a Cabling Kit to connect the Console ports of the Secondary Units to the CPU ports of the Primary unit.

2. For each Secondary unit, four Tertiary units will be connected by using a Cabling Kit to connect the Console ports of the Tertiary Units to the CPU ports of the Secondary unit. In this way, the 64 CPU ports of the Tertiary units are available through the Primary unit.

3. Connect the monitor, keyboard, and mouse ports of your PC(s), up to 64, to a CPU port in one the Tertiary units with a Cabling Kit.

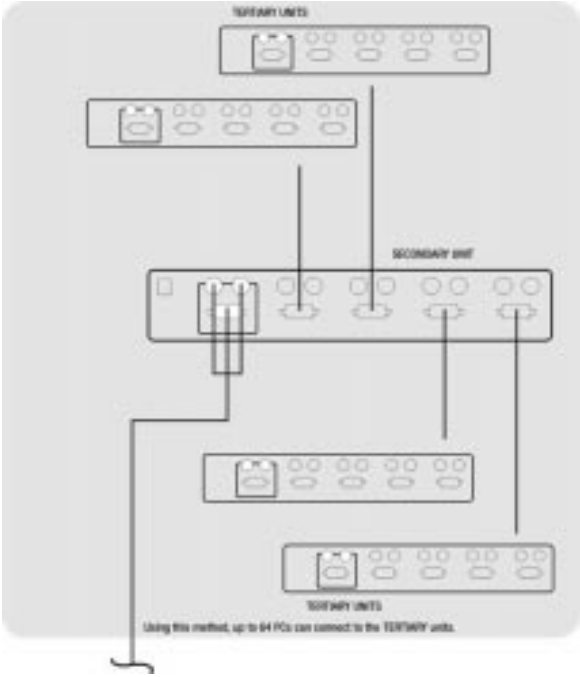

4. Plug the Power Adapters into the 4-Station CPU Switches' power ports, then plug each Power Adapter into a power source.

5. Power on the connected PC(s).

Using the ProConnect® 4-Station CPU Switch

Hot Plugging

The 4-Station CPU Switch supports hot plugging - cables can be connected or unplugged without turning off the switch's power. In order for hot plugging to work properly, however, these procedures must be followed:

- **Hot Plugging CPU Ports**

CPU port cables can be unplugged if necessary without powering down the switch. If you reconnect the Cabling Kit (available from your nearest Linksys dealer) to the same port on the switch, the switch will immediately recognize the PC. If you connect it to a different CPU port, the switch will need to redetect and initialize the connection.

- **Hot Plugging Console Ports**

The switch supports limited hot plugging of the keyboard, monitor, and mouse. Keyboards and monitors can be hot plugged on the Console ports. When hot plugging the mouse from the Console's mouse port, however, the following should be considered:

1. You may unplug the mouse and plug it back in again (to reset the mouse, for example), as long as you use the exact same mouse.

2. If you plug in a different mouse, all of the switches and all the PCs connected to the switches must be shut down and restarted. (Refer to the **Powering Off and Restarting** section the follows.)

NOTE: If there is no response to mouse and/or keyboard input, simultaneously press and hold Port Selection buttons 1 and 2 on the Primary 4-Station CPU Switch for about ten seconds to reset the keyboard and mouse connection.

Powering Off and Restarting

If it becomes necessary to power down an 4-Station CPU Switch, you must perform the following prior to starting it back up:

1. Shut down all the PCs that are attached to the 4-Station CPU Switch, along with all other switches and PCs connected.

2. Unplug the switch's power adapter.

3. After a moment, reconnect the power along with any PCs and connected switches, starting with the last connection in the chain and working back to the Primary switch.

4. After all of the connections have been made, power on the Primary switch and then any secondard or teriary switches. Next, power on the PCs connected.

Port Selection

There are two methods for obtaining instant access to any computer connected to the 4-Station CPU Switch: Manual and HotKey.

- **Manual**

Simply press the appropriate Port Selection switch on the switch's front panel to select the computer connected to the corresponding port. After you press the switch, the Selected LED will light up to indicate that the port is currently selected.

- **HotKey Navigation**

HotKey navigation allows you to conveniently access any computer directly from the keyboard, instead of having to manually select it with a Port Selection switch. Use the following method for HotKey navigation:

1. Press [**CTRL**] + [**ALT**] + [**SHIFT**] in sequence (not at the same time) to invoke the HotKey function.

2. Key in the Port ID number (as shown in the following section), then press the **Enter** key. The Port ID number must be typed within one second of invoking HotKey navigation and should be typed from the keyboard, not the number pad.

An alternative method for HotKey Navigation, pressing both **CTRL** keys simultaneously, can be chosen with DIP Switch 3 on the rear panel of the First Stage (or Primary) unit. To use the standard HotKey method, set the DIP Switch **ON**. To use the alternative method, set the DIP Switch **OFF**.

HotKey Port Selection

- **The Port ID Number**

Each CPU port on an 4-Station CPU Switch is assigned a unique Port ID. You can directly access any PC on any level of the installation by specifying the Port ID of the CPU Port that the PC is connected to with HotKey navigation.

The Port ID is a one, two, or three digit number that is determined by the Stage Level and the CPU Port number of the 4-Station CPU Switch where the PC is connected. The first digit represents the CPU Port number of the First Stage (or Primary) unit; the second digit represents the CPU Port number of the Second Stage (or Secondary) unit; the third digit represents the CPU Port number of the Third Stage (or Tertiary) unit.

For example, a PC attached to a First Stage (or Primary) unit has a one digit Port ID (from 1 to 4), that corresponds to the CPU Port number where the PC is connected.

A PC attached to a Second Stage (or Secondary) unit has a two digit Port ID. The first digit represents the CPU Port number on the First Stage (or Primary) unit that the Second Stage (or Secondary) unit links back to; the second digit represents the CPU Port number on the Second Stage (or Secondary) unit where the PC is connected. Therefore, a Port ID of **23** would refer to a computer that is connected to **CPU Port 3** of the Second Stage (or Secondary) unit that links back to **CPU Port 2** of the First Stage (or Primary) unit.

Likewise, a computer attached to a Third Stage (or Tertiary) unit has a three digit Port ID. One with a Port ID of **241** would be connected to **CPU Port 1** of a Third Stage (or Tertiary) unit, that links back to **CPU Port 4** of a Second Stage (or Secondary) unit, which, in turn, links back to **CPU Port 2** of the First Stage (or Primary) unit.

- **Auto Scan Mode**

Auto Scan automatically switches among all the active CPU Ports of all the 4-Station CPU Switches in the installation at regular intervals, allowing you to monitor their activity automatically. The length of the interval is determined by DIP Switches 1 and 2 on the Primary unit, as follows:

Time Interval	DIP Switch 1	DIP Switch 2
5 Seconds	ON	ON
10 Seconds	OFF	ON
20 Seconds	ON	OFF
40 Seconds	OFF	OFF

Use the following method for Auto Scan Mode:

1. Invoke HotKey navigation as shown in Port Selection. [**CTRL** + **ALT** + **SHIFT**]

2. Type "**0**" (zero).

3. Press the **Enter** key.

To exit Auto Scan Mode, press the **Spacebar**. The port active when exiting Auto Scan Mode will remain active.

NOTE: While using Auto Scan Mode, the console will not function. You must exit Auto Scan Mode in order to use the console again.

- **Last/Next Mode**

Last/Next Mode enables you to easily switch from the currently active computer to the previous or next available computer in the installation. There are two methods of invoking Last/Next Mode: Quick Mode and Basic Mode.

A method can be selected by using DIP Switch 4 on the rear panel of the First Stage unit. To enable Quick Mode, set the DIP Switch **ON**. To enable Basic Mode, set the DIP Switch **OFF**.

With **Quick Mode** enabled, Last/Next Mode is always available and need not be invoked, which is necessary in Basic Mode. To use Quick Mode, press the left **CTRL** key twice to switch to the previous available computer in the installation or the right **CTRL** key twice to switch to the next available computer in the installation.

While Quick Mode does allow for greater convenience, it may conflict with one of the programs running on a computer.

With **Basic Mode**, you must first invoke the function by:

1. Pressing and simultaneously releasing either [**CTRL + ALT + SHIFT**] or [**LEFT CTRL + RIGHT CTRL**].

2. Typing "**9**" and then the **ENTER** key.

Once invoked, press the left **SHIFT** key twice to switch to the previous available computer in the installation or the right **SHIFT** key twice to switch to the next available computer in the installation.

While Basic Mode is invoked, the console will not function. You must exit Basic Mode by pressing the **SPACEBAR** in order to be able to use the console.

Troubleshooting

This section provides possible solutions to problems regarding the installation and operation of the 4-Station CPU Switch. If you can't find an answer here, check the Linksys website at www.linksys.com.

1. Pressing the HotKeys gets no response.
   - The connection from the selected port to a target PC has been broken or the computer is turned off. Check the Online Port LED for the selected port. If it is not lit: 1) Manually press one of the Select switches to connect to a PC that is powered ON. 2) Check the cables to make sure they are all properly connected.
   - There has been an improper keyboard reset. 1) Reset the keyboard and mouse simultaneously by pressing Buttons 1 and 2 on the 4-Station CPU Switch where the PC is connected for several seconds. 2) Unplug the keyboard connector from the Console Keyboard Port, then plug it back in.
   - There has been an improper reset of the 4-Station CPU Switch. Power off and restart as described under **Using the ProConnect® 4-Station CPU Switch**.
   - The Port ID has been improperly entered. After invoking the HotKey function with the [**CTRL + ALT + SHIFT**] combination, be sure to enter the Port ID and press the Enter key within one second for each Port ID.

2. The mouse or keyboard does not respond.
   - There may be a loose cable. Verify that all of your connections are completely seated.
   - The mouse has been improperly reset. 1) Reset the mouse and keyboard simultaneously by pressing Buttons 1 and 2 on the 4-Station CPU Switch where the PC is connected for several seconds. 2) Unplug the mouse connector from the Console Mouse Port, then plug it back in.

Specifications

Model Numbers		SVIEW04 ver. 2
Computer Connections		Direct: 4 Max: 64
Protocol		CSMA/CD
Ports	Console:	Keyboard - One 6-pin mini-DIN female Mouse - One 6-pin mini-DIN female Video - One HDB-15 female (VGA/SVGA)
	CPU:	One console-type set for each direct connection
Scan Intervals		5, 10, 20, and 40 seconds
Monitors Supported		VGA, SVGA, and MultiSync with DDC, DDC2, and DDC2B
Maximum Resolution		1920 x 1440 SVGA
LEDs		Four Orange On-line Port Four Green Selected Port

The SVPS06 Cabling kit for connecting PCs to the CPU switch is sold separately. If you have any questions about cabling kits, please contact Linksys for assistance.

Environmental

Dimensions:	8.8” x 6” x 2” (224mm x 152mm x 52mm)
Unit Weight:	42.3 oz. (1.2 Kg)
Power:	9V DC (1.62w maximum power consumption)
Certifications:	FCC Class B, CE Mark Commercial
Operating Temp:	5ºC to 40ºC (41ºF to 104ºF)
Storage Temp:	-10ºC to 60ºC (14ºF to 140ºF)
Operating Humidity:	10% to 85%, Non-Condensing
Storage Humidity:	5% to 90%, Non-Condensing

Warranty Information

BE SURE TO HAVE YOUR PROOF OF PURCHASE AND A BARCODE FROM THE PRODUCT'S PACKAGING ON HAND WHEN CALLING. RETURN REQUESTS CANNOT BE PROCESSED WITHOUT PROOF OF PURCHASE.

IN NO EVENT SHALL LINKSYS’ LIABILITY EXCEED THE PRICE PAID FOR THE PRODUCT FROM DIRECT, INDIRECT, SPECIAL, INCIDENTAL, OR CONSEQUENTIAL DAMAGES RESULTING FROM THE USE OF THE PRODUCT, ITS ACCOMPANYING SOFTWARE, OR ITS DOCUMENTATION. LINKSYS DOES NOT OFFER REFUNDS FOR ANY PRODUCT.

LINKSYS OFFERS CROSS SHIPMENTS, A FASTER PROCESS FOR PROCESSING AND RECEIVING YOUR REPLACEMENT. LINKSYS PAYS FOR UPS GROUND ONLY. ALL CUSTOMERS LOCATED OUTSIDE OF THE UNITED STATES OF AMERICA AND CANADA SHALL BE HELD RESPONSIBLE FOR SHIPPING AND HANDLING CHARGES. PLEASE CALL LINKSYS FOR MORE DETAILS.

Contact Information

For help with the installation or operation of this product, contact Linksys Customer Support at one of the phone numbers or Internet addresses below.

Sales Information	800-546-5797 (LINKSYS)
Tech Support	800-326-7114
RMA Issues	949-261-1288
Fax	949-261-8868
Email	support@linksys.com
Web	http://www.linksys.com
FTP Site	ftp.linksys.com

http://www.linksys.com

© Copyright 2001 Linksys, All Rights Reserved.